REVISIONS				
LTR	DESCRIPTION	E.C.N.	DATE	BY/APP'D
L	REVISE AND REDRAW.	09484	01/19/93	DEG/

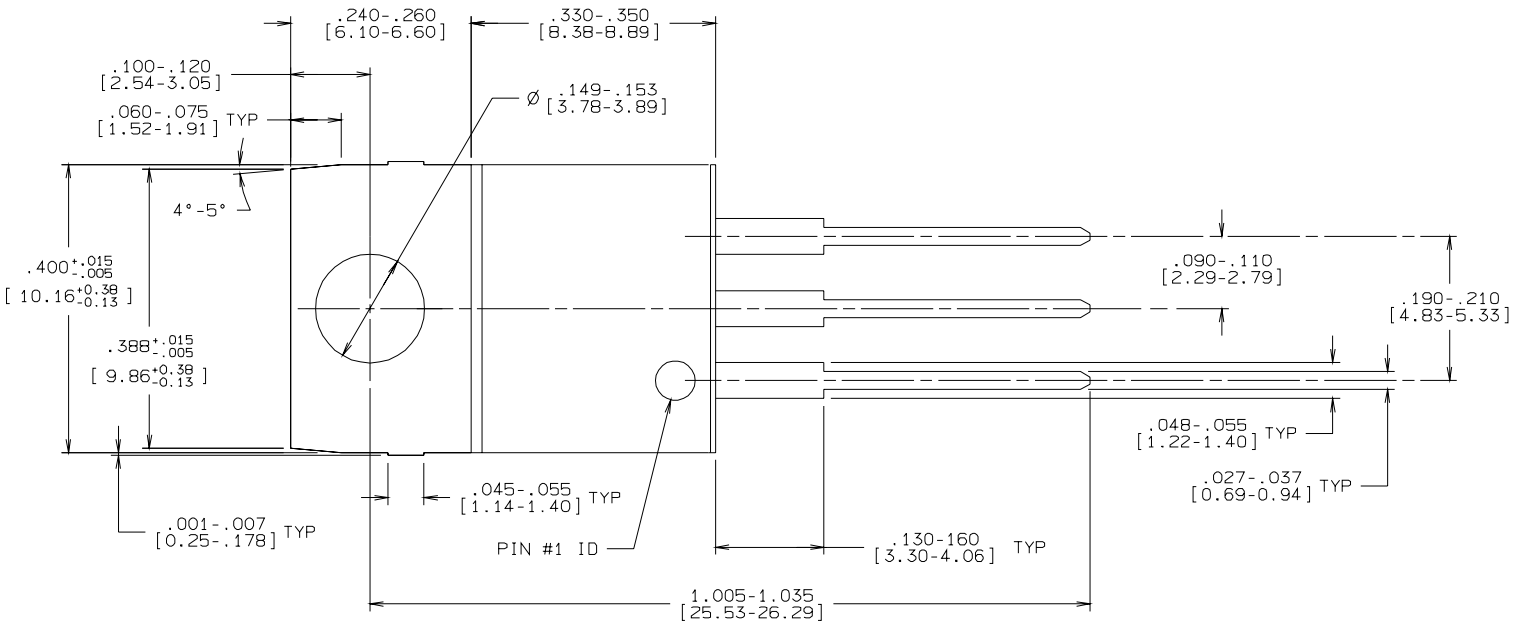

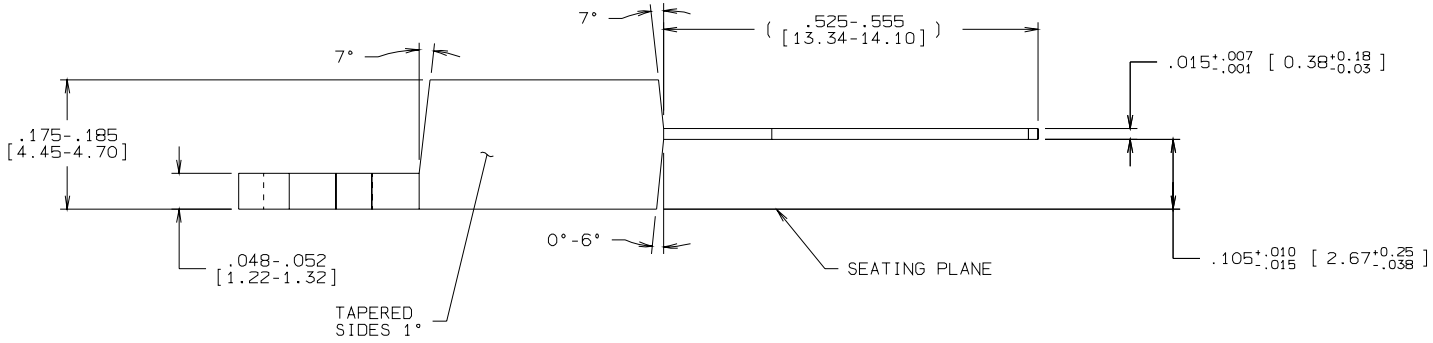

NOTES: UNLESS OTHERWISE SPECIFIED

1. STANDARD LEAD FINISH:
   200 MICROINCHES / 5.08 MICROMETERS MINIMUM
   LEAD/TIN 15/85 ON OLIN 194 COPPER OR EQUIVALENT.
2. DIMENSIONS BASED ON JEDEC STANDARD TO-220,
   VARIATION AB, ISSUE J, DATED 3/24/87.
3. REFERENCE DIMENSIONS ARE IN PARENTHESES.

CONTROLLING DIMENSION: INCH

APPROVALS	DATE
DRAWN D.E.GRADY	01/19/93
DFTG. CHK.	
ENGR. CHK.	
APPROVAL	

NATIONAL SEMICONDUCTOR CORPORATION
2900 Semiconductor Drive, Santa Clara, CA 95052-8090

TO-220, MOLDED, 3 LEAD, AUTO L/F

PROJECTION INCH [MM]

SCALE	SIZE	DRAWING NUMBER	REV
N/A	C	MKT-TA03F	A

DO NOT SCALE DRAWING — SHEET 1 OF 1